Instant Boiling Water

# Zip Red-E-Boil

**Boiling** | **Filtered** | **Instantly**

## Counter top instant boiling water for busy kitchens

**10 and 17 litre models with classic tap**

**Features**

Boiling water instantly for tea, coffee and cooking
Automatic fill
Integral high capacity sub-micron triple action filter
Pull down classic tap for filling cups, locks 'ON' for filling pots
High capacity model with twin taps
Stainless steel tank and outer case
Multi-function display comprising:

- 7 day timer
- Energy saving ECO mode
- Early warning lime-scale diagnostics
- Filter life indicator

Integral drip tray can be plumbed to waste

**Delivery rate**
60 or 100 cups at a time

**Recovery rate**
168 cups/hour

*As Zip policy is one of continuous product improvement, changes to specifications may be made without prior notice.*

*The terms Zip and Red-E-Boil are trademarks.*

Instant Boiling Water

# Zip Red-E-Boil

**Boiling** | **Filtered** | **Instantly**

Counter top instant boiling water for busy kitchens

| Zip Model | Capacity Litres | Initial heat up time (mins) | Delivery cups at a time | Recovery cups/hr | Weight (kg) Full | Rating (kW) @230V | Dimensions (mm) W x D x H |
|---|---|---|---|---|---|---|---|
| HC110 | 10.0 | 32 | 60 | 168 | 28.1 | 3.0 | 260 x 555 x 610 |
| HC117 | 17.0 | 48 | 100 | 168 | 38.9 | 3.0 | 360 x 555 x 610 |

## Technical Features

- Provides water at 96°C. Can be adjusted if required.
- 0.9mm 304 & 316 grade stainless steel tank construction.
- 304 grade Super-brush polish stainless steel outer case construction.
- 304 grade Mirror polish stainless steel drip-tray construction.
- Status indicator when heating and when ready for use.
- Integral 0.2 micron, triple action filtration.
- Dual over-boil and boil-dry safety protection.
- 7 day programmable timer.
- Energy saving ECO mode.
- Programmable filter counter with indicator when ready to change.
- Early warning lime-scale diagnostics.
- Unique tank baffle plate construction aids heat recovery and reduces steam emissions.

## Installation

### Location

Place on a suitable worktop capable of holding its weight when full where there is adequate space to use the boiler safely.

Do not locate next or near to other heat sources.

Ensure a minimum clearance of 50mm around the product.

### Plumbing

Designed for connection to a potable cold water supply with a minimum pressure of 2 bar and a maximum pressure of 7 bar.

A pressure reducing valve must be installed if the water supply pressure is likely to exceed 7 bar.

A 1.6 metre flexible water hose is provided to connect the boiler to the mains water supply via an accessible isolating tap with a ¾" BSP thread.

### Electrical

A 1.7 metre cable fitted with a UK standard 3 pin plug is provided for connection to a standard 13 amp switched outlet.

This product must be earthed.

### Drainage

The integral drip-tray is designed to handle small spillages and drips.

It is recommended where possible to drain to waste either from the drip tray using Zip accessory ZE013 or by ½" BSP connection at the rear.

A minimum 15mm diameter pipe is required to drain to a safe outlet.

### Caution

In some hard water areas where mineral scale accumulation can become a problem, consideration should be given to the maintenance required.

### Accessories

ZE013 - Drain Kit
ZT402 - Zip 0.2 micron replacement filter

### Approvals

WRAS approved and CE endorsed.

### Warranty

2 years on site parts and labour.
For full details of the Zip Warranty Scheme visit: www.zipheaters.co.uk/warranty.

### Technical Support
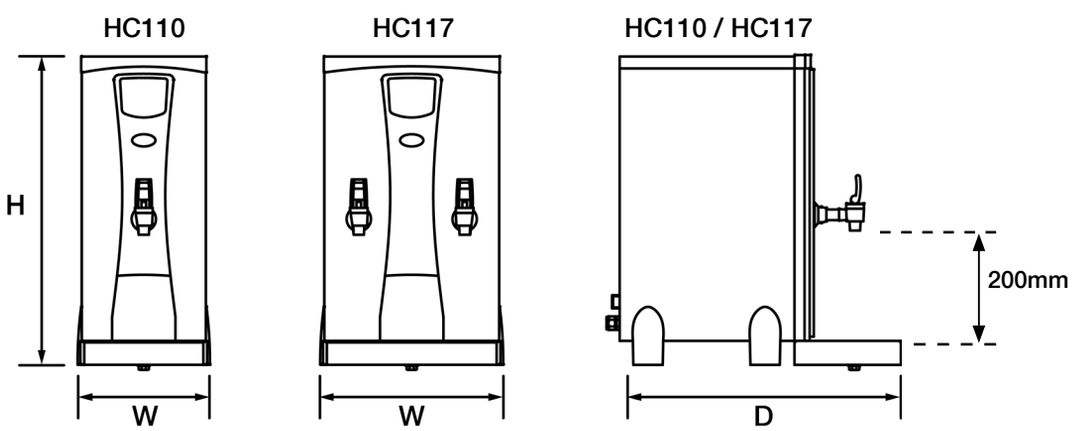
Contact Zip on: 0845 6 005 005